Replaces Exmark Radius S-Series Parts

52in Rotary Mower
52in Deck Parts

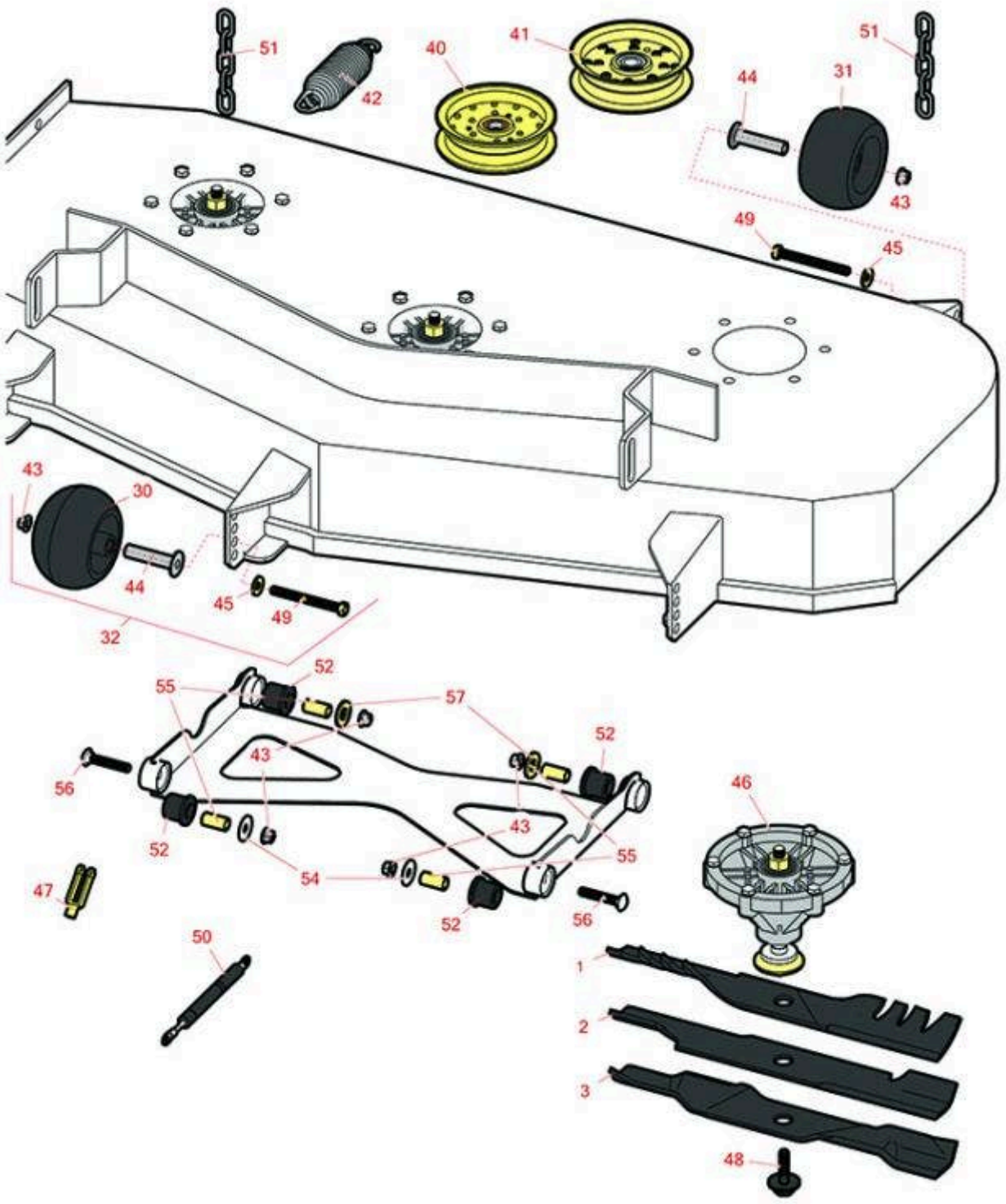

All original equipment manufacturers names and part numbers are used for identification purposes only, and we are in no way implying that our products are original equipment parts. Prices subject to change without notice.

Replaces Exmark Radius S-Series Parts

52in Rotary Mower
52in Deck Parts

Item No	R&R Part No.	OEM Part No.	Description	Qty Req	Order Quantity
Rotary Blades					
1	**R116-5175**	116-5175	Mower Blade - 18 in Mulching	3	
1	**RRB4065-1803**	116-5175, 116-5175-S	Mower Blade - Mulcher 18 x 2.5in x 15/16 Mt Hole	3	
2	**RRB3065-1803**	103-6402, 103-6402-S, 106-6402	Mower Blade - High-Lift 18 x 2.5in x 15/16 Mt Hole	3	
	Detail Description: R&R Products rotary blades are manufactured in the USA with superior allow steel and hardened for extended life. Lifetime guaranteed against defects in material and workmanship.:				
3	**RRB5360-1803**	103-6392, 103-6392-S	Mower Blade - Wave Mulcher 18 x 2.5in x 15/16 Mt Hole	3	
Other Parts Available					
30	**R103-8415**	103-8415	Roller - Anti Scalp	3	
31	**R68-2730**	1-603299	Wheel - Anti Scalp	2	
32	**R116-9981**	116-9981	Kit - Anti-Scalp Roller	3	
40	**R116-4669**	116-4669	Idler Pulley - Flat	1	
40	**R126-9196**	126-9196	Idler Pulley - Flat	1	
41	**R126-9197**	126-9197	Pulley - Idler - Flat 5.00 x 1.31	1	
42	**R116-6317**	116-0133, 116-6317	Spring - Extension	1	
43	**R104-8301**	104-8301, 109-6658	Locknut - 3/8-16 Nylon Flanged	16	
44	**R116-8131**	116-8131	Axle - Roller	5	
45	**R98-5975**	98-5975	Washer - Belleville	5	
46	**R126-4630**	126-4630	Spindle Housing Assy	3	

All original equipment manufacturers names and part numbers are used for identification purposes only, and we are in no way implying that our products are original equipment parts. Prices subject to change without notice.

Replaces Exmark Radius S-Series Parts

52in Rotary Mower
52in Deck Parts

Item No	**R&R Part No.**	OEM Part No.	Description	Qty Req	**Order Quantity**
47	**R282-2**	1-303105	Yoke	1	
48	**R116-0005**	116-0005	Bolt- Blade, - Sems 7/16-20	3	
49	**R116-9362**	116-9362	Bolt - Hex HD 3/8-16 x 3 3/4 GR8 YZ	5	
50	**R126-4322**	126-4322	Dampener	2	
51	**R1-633447**	1-633447	Chain - Deck Lift	4	
52	**R126-8360**	126-8360	Rubber Bushing	4	
54	**R2844**	2844	Washer	2	
55	**R108-6544**	108-6544	Spacer	4	
56	**R3231-7**	3231-7	Bolt - Carriage 3/8-16 x 2-1/4	4	
57	**R1-373034**	1-373034	Washer - 7/16 HD	2	

All original equipment manufacturers names and part numbers are used for identification purposes only, and we are in no way implying that our products are original equipment parts. Prices subject to change without notice.